Lagan College Mathematics Department

GCSE
FURTHER MATHS

Inclined Planes

PP Questions

10 A box of mass 6 kg rests on the surface of a rough plane inclined at 25° to the horizontal as shown in **Fig. 5**.

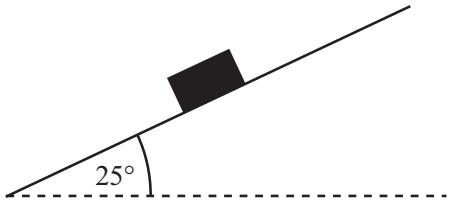

Fig. 5

The box is just on the point of sliding down the plane.

(i) Copy **Fig. 5** and mark clearly on your diagram **all** the forces acting on the box. [2]

(ii) Calculate the normal reaction of the plane on the box. [1]

(iii) Show that the coefficient of friction between the box and the plane is 0.47, correct to 2 decimal places. [2]

The box is now pulled up the plane by a light inextensible string which is held parallel to the line of greatest slope of the plane. It exerts a force of P newtons on the box, as shown in **Fig. 6**. The box moves up the plane with constant velocity.

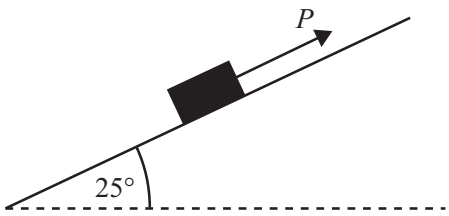

Fig. 6

(iv) Copy **Fig. 6** and mark clearly on your diagram all of the forces now acting on the box. [1]

(v) Find the value of P. [2]

The force P is increased in magnitude and the box now moves up the plane with an acceleration of 3.5 m/s^2.

(vi) Find the new value of P. [3]

7 A package of mass 4 kg is held at rest on the surface of a rough plane which is inclined at 22° to the horizontal as shown in **Fig. 4**.

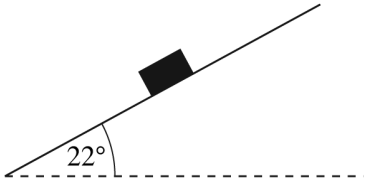

Fig. 4

The package is released from rest and begins to slide down the plane.

The coefficient of friction between the package and the plane is 0.3

(i) Copy **Fig. 4** and mark clearly on your diagram all the forces acting on the package as it slides down the plane. [1]

Giving your answers correct to 2 decimal places,

(ii) calculate the normal reaction of the plane on the package, [1]

(iii) show that the magnitude of the force due to friction acting on the package is 11.13 N, [2]

(iv) find the acceleration of the package as it slides down the plane, [3]

(v) find the speed of the package when it has travelled 1.4 m down the plane. [2]

10 A box of mass 5.2 kg is pulled **up** a rough plane which is inclined at 35° to the horizontal by a string acting parallel to the plane, as shown in **Fig. 6**.

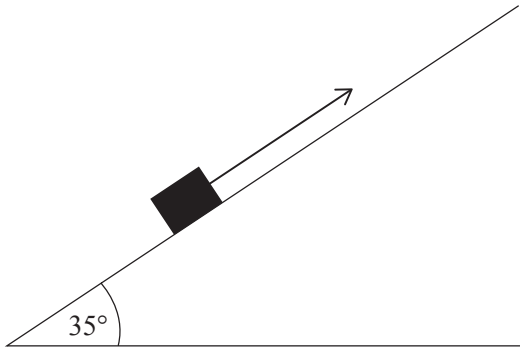

Fig. 6

The string exerts a force of 40 N on the box, which moves at a **constant** speed of 2.5 m/s.

(i) Copy **Fig. 6** and mark clearly on your diagram **all** the forces acting on the box. [2]

(ii) Find the coefficient of friction between the box and the plane, correct to 3 decimal places. [4]

The string is removed and the box continues for a further x metres up the plane before coming to rest.

(iii) Find the acceleration of the box after the string is removed. [3]

(iv) Find the value of x. [2]

11 A block of mass 5 kg is on a rough plane which is inclined at an angle of 15° to the horizontal, as shown in **Fig. 6**.

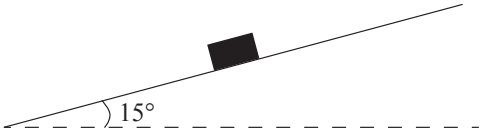

Fig. 6

The block is projected up the plane with a speed of 8 m/s, and travels up the plane for 2 seconds before coming to rest momentarily.

(i) Show that the deceleration of the block is 4 m/s^2. [1]

Calculate, giving your answers correct to 2 decimal places,

(ii) the magnitude of the normal reaction between the block and the plane, [1]

(iii) the magnitude of the frictional resistance, [3]

(iv) the coefficient of friction. [2]

The block now slides down the plane.

(v) Calculate the acceleration of the block down the plane. [5]

6 The diagram below shows a block of mass 10 kg being pulled up a rough plane inclined at 40° to the horizontal by a force of 90 N, acting parallel to the plane.

The coefficient of friction between the block and the plane is 0.25

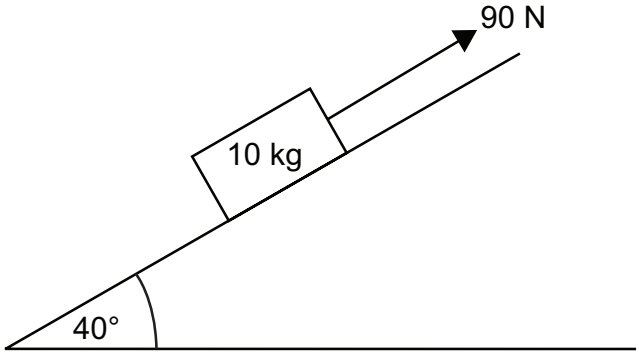

(i) Mark on the diagram all the forces acting on the block. [2]

Calculate

(ii) the normal reaction between the block and the plane, [2]

(iii) the magnitude of the force due to friction between the block and the plane, [2]

(iv) the acceleration of the block up the plane. [2]